Owner Manual with Parts List

BOLENS
21HD-01
SUPER RIDE-A-MATIC TRACTOR

03.05.2011

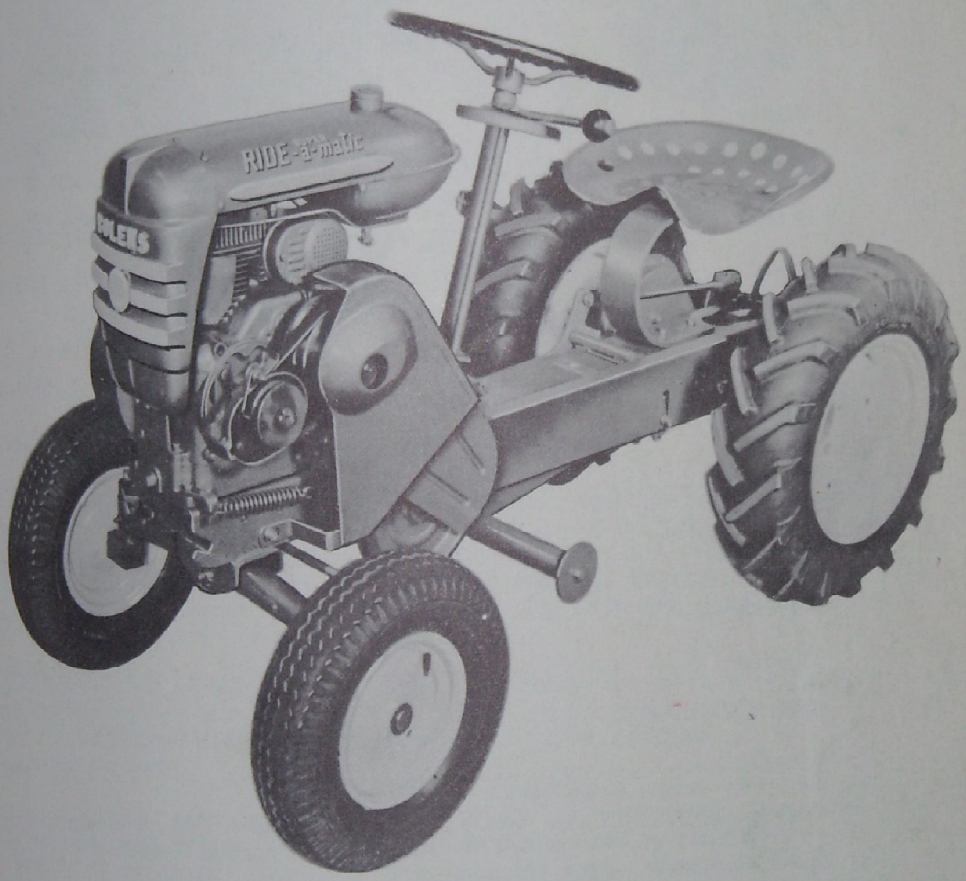

BOLENS PRODUCTS DIVISION
Food Machinery & Chemical Corporation
Port Washington Wisconsin

TO THE BOLENS OWNER

09.05.2011

This Owners Manual has been especially prepared to bring to your attention all information needed to operate and maintain your tractor with maximum efficiency. Read these instructions carefully before assembling or operating the tractor. Through proper care and operation, as explained in this manual, you will obtain long, efficient service and trouble free operation from it.

Information regarding operation and maintenance of the engine is not included in this manual. A separate engine instruction manual is included with each tractor and should be consulted for all information concerning adjustments and operation.

REGISTER YOUR TYPE AND SERIAL NUMBER

Register your tractor type number, serial number and engine serial and type number in the space provided below and always refer to them when writing for information or ordering parts. Complete the registration card received with the tractor and return to the factory. A name plate showing type and serial number of the tractor is attached to the frame. The engine type and serial number is on the engine name plate.

TRACTOR TYPE NO. _ _ _ _ _ _ _ _ _ _

TRACTOR SERIAL NO. _ _ _ _ _ _ _ _ _ _

ENGINE TYPE NO. _ _ _ _ _ _ _ _ _ _

ENGINE SERIAL NO. _ _ _ _ _ _ _ _ _ _

SPECIFICATIONS

Engine	Kohler K160 6.6 HP with rope starter
Tires	Front, 4.00-8; rear, 6-12
Brakes	Band type - foot operated, with lock
Tread	Rear 24-1/2 inches, front 24-3/4 inches
Wheel Base	40 inches
Height	35-1/4 inches
Width	30-1/2 inches (maximum)
Length	60 inches
Speeds	Forward - 0 to 5-1/2 m.p.h. Reverse - 0 to 4-1/2 m.p.h.
Steering	Automotive type
Turning	Radius 5 feet
Crop Clearance	9 inches
Weight	450 pounds
Fuel	One gallon tank, 3 to 4 hours operation under normal conditions
Attachment Lift	One lever for all front and rear attachments requiring lift. Positive locking.
Front Hitch	Patented snap hitch
Rear Hitch	Trigger type, no pins or bolts
Side Motion Stop	Turned up for positive stop of side motion, turned down permits side motion of rear attachments
Reverse	Safety reverse
Drive	Bolens Versa-Matic, variable forward speeds at constant full engine speed

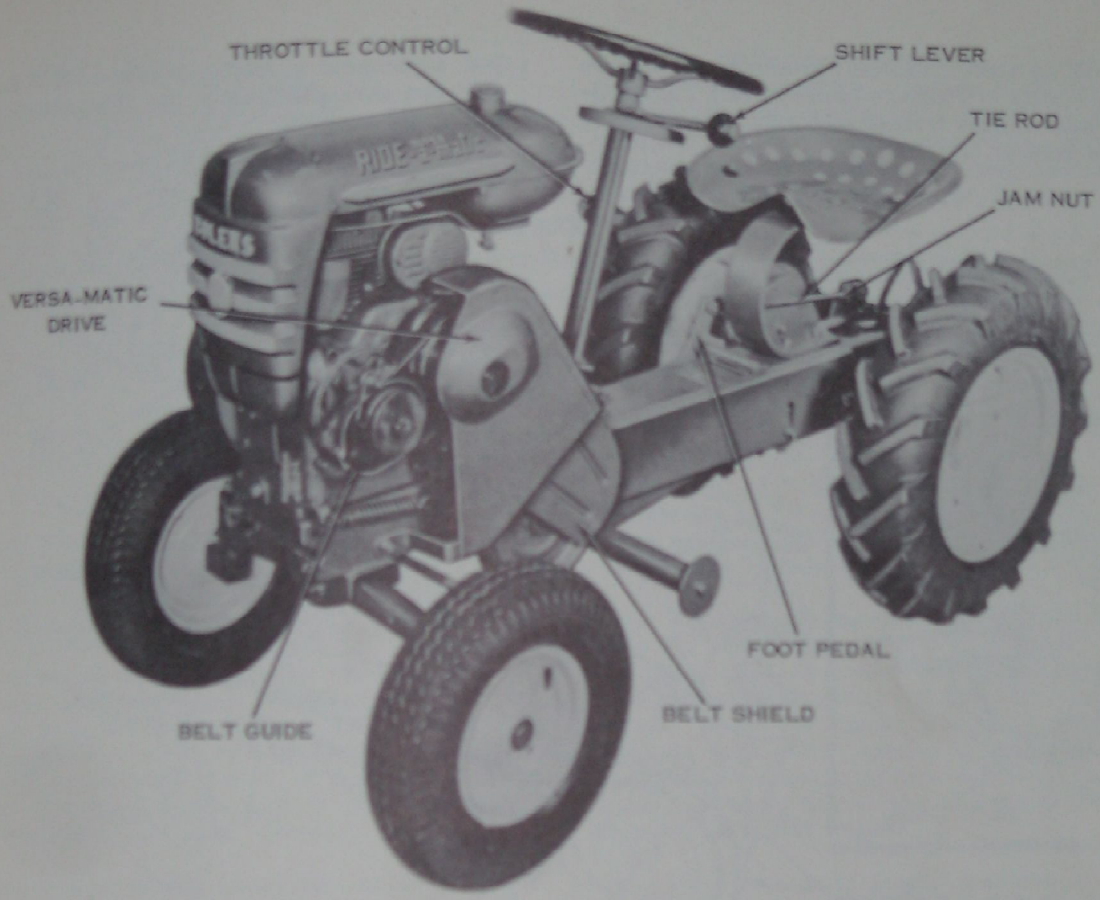

08.05.2011

Figure 1.

INSTALLATION

The 21HD Super Ride-A-Matic tractor is shipped completely assembled except for the wheels. Mount the rear wheels, dished out, so they will rotate in direction indicated by arrows on tires and secure with wheel bolts in accessory bag. Mount front wheels and secure with flat washers and snap rings.

The tractor is designed not only for an attractive appearance but is also carefully engineered in every detail to give the owner efficient, trouble free performance in the field or around the home.

Attachments are mounted quickly and easily as the front of the tractor is equipped with Bolens "Snap Hitch" and the rear with "Trigger Hitch." These two features allow mounting of both front and rear attachments without the need of troublesome tools. The hinge plate on the "Trigger Hitch" features a double action performance. With the hinge lock up, the hitch will be held stationary for use with attachments such as lawn mower, dump cart and lawn roller which require the Model F130A Hitch. When the hinge lock is turned down the hitch can move from side to side which action is desirable with ground working attachments. If the hitch is raised with the hinge lock down, the welded bracket on rear of tractor frame will hold the hitch stationary in center position for turning at the end of plot or easy transport of attachment when not in use.

There are four operation controls, each located for the convenience of the operator: the throttle control and shift lever on the steering post, tool lift for both front and rear attachments on the right side of frame and right side foot pedal for applying or locking brakes.

The rear tires are 6-12 traction type, mounted on 5 inch rims. Front tires are 4.00 - 8 ribbed type mounted on 4 inch rims.

Power is supplied by a four-cycle, air cooled engine, rated at 6.5 HP, with rope starter cable. The drive operates through two special high strength cord belts, one from the engine sheave to Versa-matic sheave and the other from Versa-matic sheave to the sheave on transmission shaft. Power is then transmitted by drive chain to gear train and rear axle.

The gear train is enclosed in a steel stamped, grease filled case and is made up of precision machined steel hardened gears, designed to give smooth, carefree performance under all conditions.

Double action ratchet assemblies are keyed to the rear axle and drive the cast iron hubs in either direction. The assemblies are designed to allow the ratchet in the outside wheel to over-run the hub teeth when turning the tractor.

08.05.2011

Parts such as shaft housings, sprockets and sheaves that are subject to wear are equipped with high quality bearings to give smooth operation and increase the life of the unit.

Seat adjustment to best suit the [illegible] of the operator can easily be made by use of [illegible] series of holes in the seat support.

OPERATION

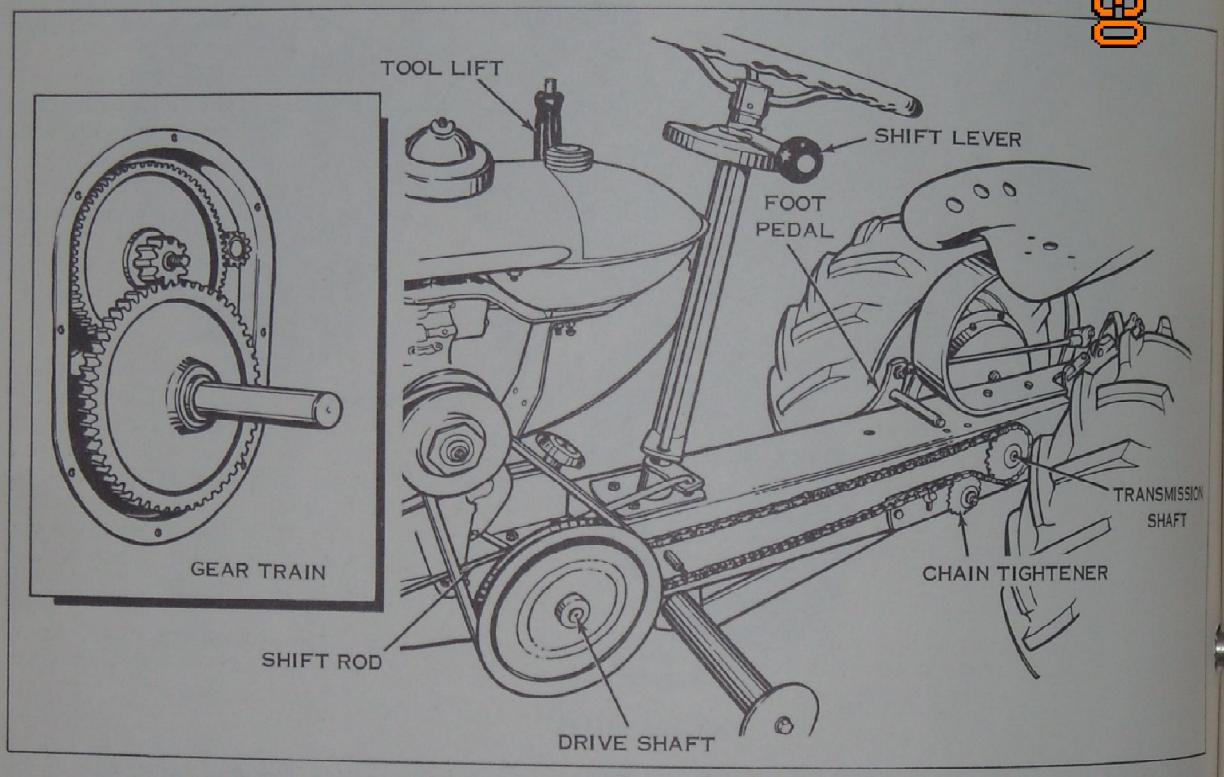

Figure 2.

IMPORTANT: No oil is in the engine crankcase when shipped from factory. BEFORE STARTING THE ENGINE BE SURE TO FILL CRANKCASE AND AIR CLEANER TO LEVEL INDICATED WITH LUBRICANT SPECIFIED IN ENGINE MANUAL. Always keep perforated starter housing clear of foreign matter as this will affect the air cooling action and cause engine to overheat. Further instructions pertaining to care and lubrication are contained in engine manual; read these instructions carefully.

The Versa-matic drive instantly varies the forward ground speed of the tractor. Moving the clutch lever forward from neutral moves the Versa-matic sheave assembly backward, thus tightening the belt from engine sheave. The further the clutch lever is moved forward the more the speed increases. This variation of speed is controlled by the construction of the Versa-matic sheave which is designed with a floating center section. As the Versa-matic sheave moves backward, the engine belt is forced to run lower in the sheave, thus decreasing the diameter. At the same time the floating section is forced over, causing the other belt to ride higher in the sheave, increasing the diameter of this section (Figure 4).

To reverse tractor, push button on clutch lever and pull lever backward. This brings the Versa-matic sheave in direct contact with the reverse disc of the engine sheave. A safety feature incorporated in the reverse will permit the tractor to return to neutral as soon as the hand is removed from the clutch lever (Figure 3).

Certain operating technique must be exercised in shifting so as not to abuse the mechanism and put unnecessary strain on the belts.

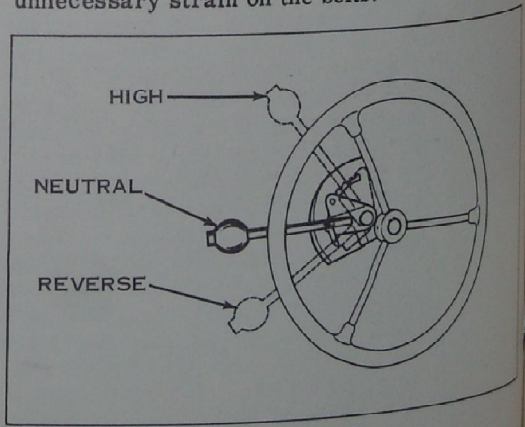

Figure 3.

08.05.2011

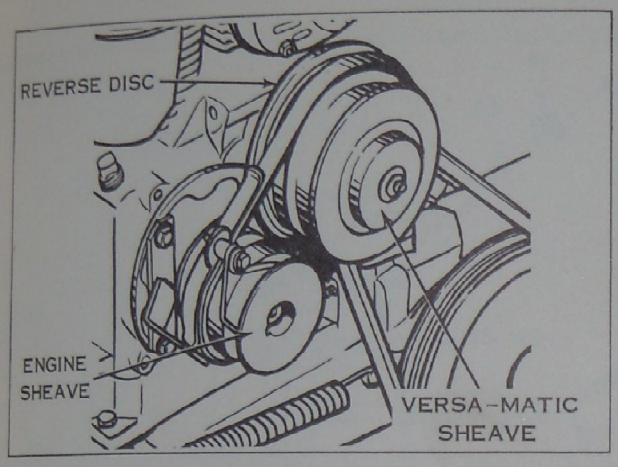

Figure 4.

DO NOT FORCE CLUTCH LEVER FORWARD WHEN ENGINE IS NOT RUNNING. NEVER SHIFT FROM FORWARD TO REVERSE UNTIL TRACTOR HAS COME TO A COMPLETE STOP.

When shifting in forward direction the action should be a slow steady movement of the clutch lever to allow the belts to change their position in the variable sheave. This action is explained in a previous paragraph on the construction of the Versa-matic sheave. This same action applies when returning shift to neutral or shifting to reverse.

To replace drive belts, remove belt guide and belt shield. Release tension spring from stud on engine base. The belts are now free so they can be removed easily.

In order for the tractor to idle properly there must be the proper amount of belt slack in engine sheave when tractor is in neutral. This adjustment is made by changing the length of the shift rod by use of the threaded shift bracket. Proper setting can be checked as follows: WITH ENGINE NOT RUNNING, push the clutch lever button allowing the lever to move forward. The lever pin should go forward into first notch of quadrant or slightly beyond. Return clutch lever to neutral and check to see that the drive belt is free from drag on engine sheave. If necessary screw clutch rod into bracket until proper clearance is obtained.

The tractor is assembled with 16 tooth sprocket on the drive shaft and a 22 tooth sprocket on the transmission shaft, allowing a maximum forward speed of 3-1/2 miles per hour. The maximum speed can be increased to 5-1/2 miles per hour by reversing these two sprockets. To do this it is only necessary to remove the chain guard, belt shield, sheave and snap rings holding sprockets. Release chain tightener assembly, slip sprockets from shafts, reverse their positions and secure with snap rings. Adjust chain tightener so that chain can be compressed approximately one-half inch with slight pressure of fingers (Figure 2).

Flat washers are provided between the chain sprockets and shaft housings and also between the collar on drive shaft and shaft housing to protect these parts from wear. These washers should be inspected occasionally and be replaced if they show excessive wear. (See exploded view.)

To lock brakes, push foot pedal down and move washer and shaft in so that the shaft catches beneath tractor frame. To release brakes, push pedal down, move shaft out until it clears tractor frame and remove pressure from pedal.

After brake bands become worn it may be necessary to make adjustment to hold tractor in locked position. This adjustment is made by loosening jam nuts on tie rod, turning rod into clevis to decrease overall length and tighten jam nuts. Adjustment to equalize brake band tension is made by use of the slotted hole in equalizing arm on brake tube. Loosen capscrew, shift brake tube to desired position and tighten capscrew. (Figure 1.)

Keep tires inflated to proper pressure at all times; 6 pounds for rear tires and 20 pounds for front tires.

LUBRICATION (See Figure 9)

The tractor is equipped with sixteen high pressure grease fittings located as follows: Front spindles (2), rear hubs (2), drive shaft housing (1), transmission shaft housing (1), Versa-matic sheave (1), gear case (1), pivot support (1), pulley support (2), front wheel hubs (2), rear axle housing (1), chain tightener (1) and front axle (1).

The gear case is lubricated with special liquid gear grease at factory when assembled which will last a considerable length of time unless for some reason a leak should develop. As a precautionary measure it is recommended that a small amount of regular pressure gun grease be added through grease fitting each time the tractor is lubricated. The plug on side of cover is not a grease level plug. This plug is provided for removal of the gear train shaft.

EXPLODED VIEW OF TRACTOR ASSEMBLY

03.05.2011

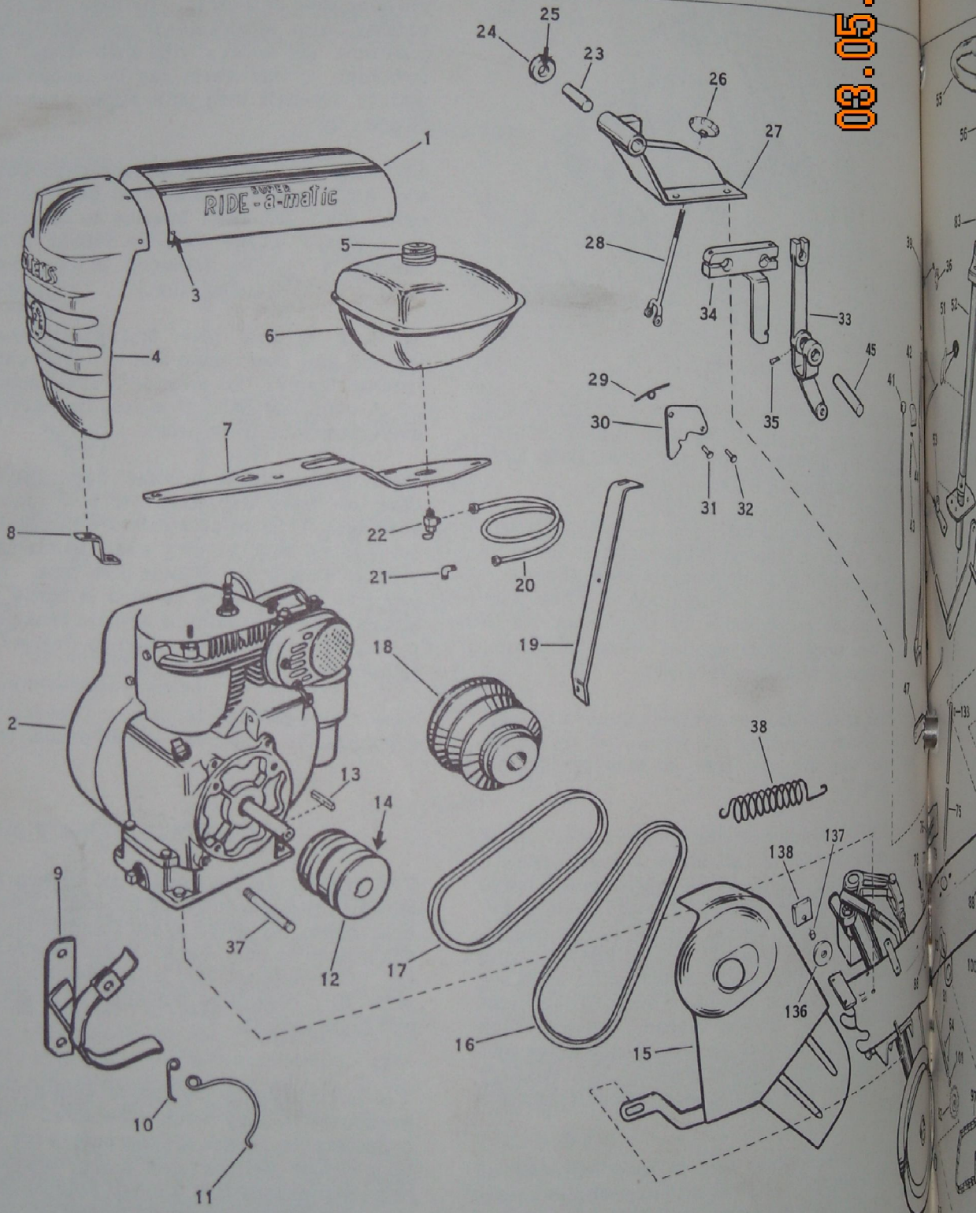

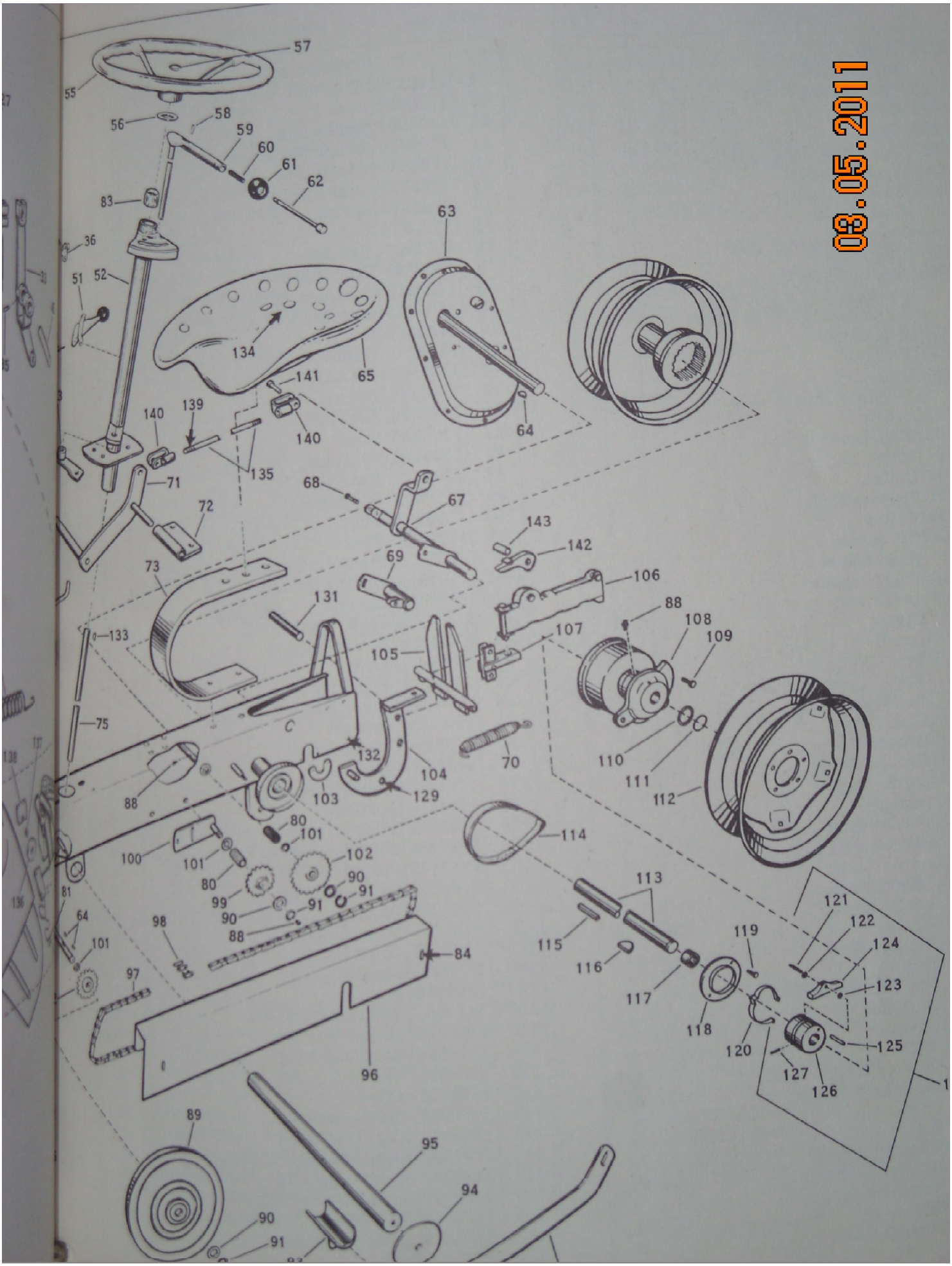

57
55
56
58
59
60
61
62
83
36
51
52
63
134
65
141
140
139
140
135
64
71
68
67
72
143
142
73
69
106
131
88
108
133
107
109
105
75
132
104
70
110
111
88
103
129
112
80
101
114
100
101
102
80
90
99
91
90
91
113
121
122
98
88
115
119
124
84
116
123
97
117
118
120
125
96
127
126
89
95
94
90
91

03.05.2011

TRACTOR ASSEMBLY

Ref. No.	Part No.	Description	No. Req'd.
1	1705996	Hood	1
2		Engine K160	
3	1185109	Thd Cutting Screw	5
4	1703621	Grille	1
5	1703130	Cap	1
6	1701520	Gas Tank (Incl. Cap)	1
7	1706351	Tank Support	1
8	1706352	Grille Support	1
9	1706384	Belt Guide	1
10	1703540	Belt Stop	1
11	1704260	Belt Stop	1
12	1706350	Engine Sheave	1
13		Sq. Key, 1/4 x 1-1/2"	1
14		Set Screw, 5/16-18 x 3/8"	2
15	1706391	Belt Shield	1
16	1706383	Belt, 42"	1
17	1706382	Belt, 24"	1
18		Variable Sheave (Fig. 8)	1
19	1706731	Brace	1
20	1706353	Fuel Line	1
21	1703897	Elbow	1
22	1703896	Outlet	1
23	1706431	Support Shaft	1
24	1706236	Collar	1
25	1182554	Set Screw	1
26	229358	Hand Wheel	1
27	1706358	Pivot Support	1
28	1703059	Latch Rod	1
29	1703058	Spring	1
30	1703057	Latch	2
31	1703060	Pin	1
32	1703061	Pin	1
33	1706367	Pulley Support	1
34	1706432	Link Lever	1
35	1104954	Grease Fitting	4
36	1700213	Ground Switch	1
37	1706386	Spring Stey	1
38	1706385	Spring	1
39	1705300	Handle Grip	1
40	1705294	Lift Lever	1
41	1705614	Lever Latch	1
42	1705297	Latch Guide	1
43	1705299	Latch Spring	1
44	1107382	Washer	1
45	1706426	Support Shaft	1
46	1102169	Stop	1
47	1706636	Rod Bracket	1
48	1706638	Shift Rod	1
49	1705318	Housing	1
50	1705317	Wire	1
51	1705246	Control Lever	1
52	1706379	Steering Housing	1
53	1706378	Arm	1
54	1185218	Pin	1
55	1705222	Steering Wheel	1
56	1705923	Spacer Washer	1
57	1113527	Retaining Ring	As Req.
58	1185256	Pin	1
59	1705767	Control Rod	1
60	1703065	Spring	1
61	1703067	Control Knob	1
62	1704994	Plunger	1

Ref. No.	Part No.	Description	No. Req'd.
63		Transmission Assy. (Fig. 6)	1
64	1100283	Woodruff Key, 1/8 x 3/4"	1
65	1700367	Seat	3
66	1706007	Brake Stop	1
67	1705930	Brake Shaft	1
68	1704680	Clevis Pin	1
69	1705673	Brake Tube	2
70	1705944	Spring	1
71	1705934	Lever	1
72	1705937	Bracket	1
73	1705869	Seat Support	1
74	1700215	Shoulder Bushing	1
75	1705875	Steering Rod	2
76	1705311	Quadrant	1
77	1705280	Collar	1
78	1182554	Set Screw	1
79	1706338	Frame	1
80	1185074	Bearing	1
81	1705838	Shaft	5
82	1706123	Sprocket	1
83	1705876	Bearing	1
84	1110022	Wing Nut	2
85	1705867	Pinion	2
86	1705928	Pin	1
87	1706375	Steering Gear	1
88	1104954	Grease Fitting	1
89	1706346	Sheave	5
90	1705093	Spec. Washer	1
91	1118808	Retaining Ring	2
92	1705862	Link	2
93	1706077	Lift Crank	1
94	1705345	Spec. Washer	1
95	1706078	Support	2
96	1706389	Chain Guard	1
97	1705255	Chain	1
98	1185013	Connecting Link	1
99	1706124	Sprocket	1
100	1705842	Idler Bracket	1
101	1107386	Flat Washer, 5/8"	5
102	1706122	Sprocket	1
103	1704666	Brake Support	2
104	1705857	Arm	1
105	1705315	Hinge Lock	1
106	1706082	Draw Bar	1
107	1706072	Clevis	1
108	1706012	Hub	2
109	101085	Hub Bolt	6
110	1703073	Thrust Washer	As Req.
111	1118554	Retaining Ring	2
112	1700953	Wheel	2
113	1702867	Axle	1
114	1704682	Brake Band	2
115	1703053	Key, 1/4" sq.	1
116	1181093	Woodruff Key, 1/4 x 1-1/2"	1
117	1185300	Bronze Bearing	2
118	1703070	Spring Flange	2
119	1185164	Thd Cutting Screw	6
120	1703071	Friction Spring	2
121	1705106	Pin	2
122	1705108	Washer	2
123	1705119	Bowed Washer	2
124	1702961	Hub Pawl	2

08.05.2011

Ref. No.	Part No.	Description	No. Req'd.
125	1703072	Pin	2
126	1702857	Drive Hub	2
127	1703066	Roll Pin	4
128	1705281	Pawl and Hub Assy (121 thru 127)	2
129	1705946	Spec. Screw	1
130	1705959	Stripper Bolt	1
131	1705329	Spacer	1
132	1705667	Cap Screw	1
	1701411	Spec. Washer	1
133	1100276	Woodruff Key	1
134	1110026	Wing Nut, 1/2-13	1
135	1705942	Tie Rod	1
136	1700039	Cable Pulley	1

Ref. No.	Part No.	Description	No. Req'd.
137	1700094	Cable Pulley Bushing	2
138	1700045	Cable Guide	2
139	1121709	Jam Nut	1
140	1705947	Yoke	1
141	1112587	Clevis Pin	1
142	1706010	Lock Cam	1
143	1702897	Pin	1
144	1706335	Stud	1
		NOT ILLUSTRATED	
	350002	Hex Wrench, 3/8"	1
	350004	Hex Wrench, 5/16"	1

08.05.2011

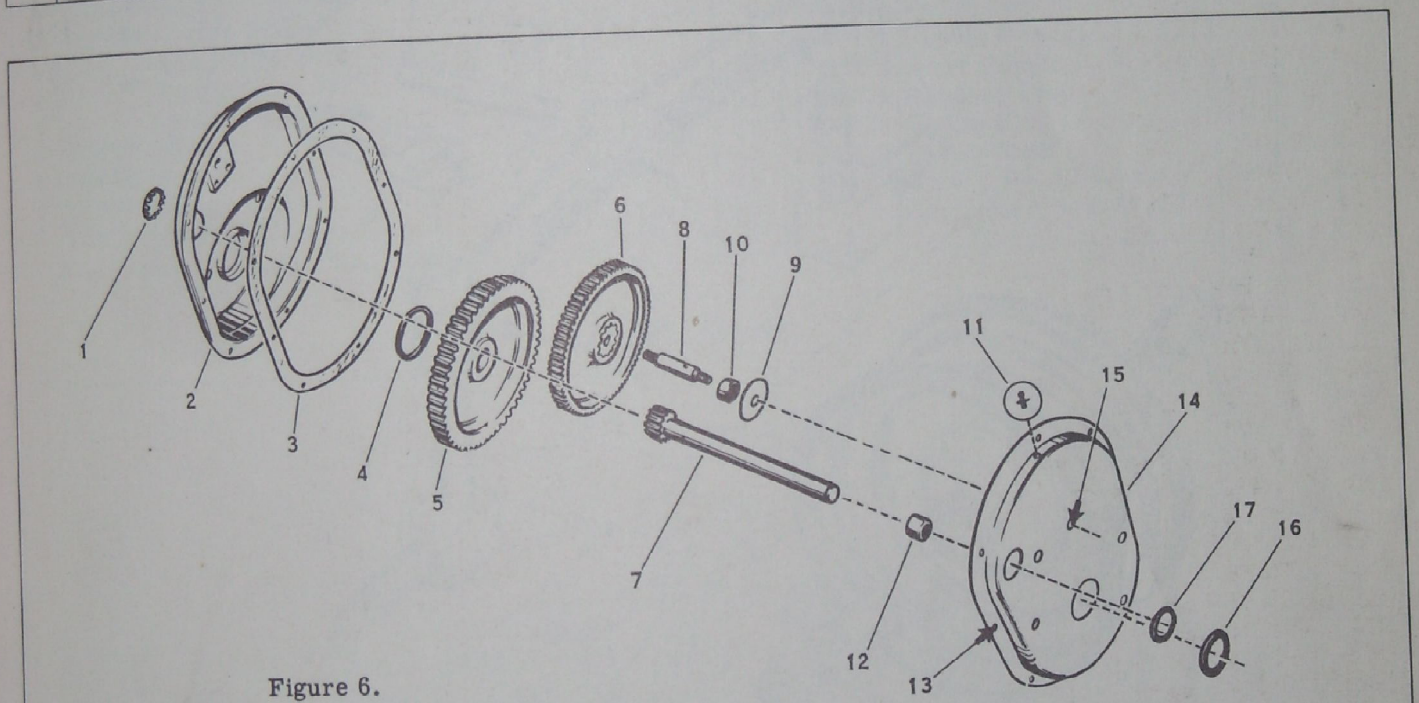

Figure 6.

TRANSMISSION ASSEMBLY

Ref. No.	Part No.	Description	No. Req'd.
1	1703056	Plug	1
2	1702909	Gear Cover	1
3	1703055	Gasket	1
4	1703054	Seal	1
5	1702917	Gear - 53T	1
6	1703942	Cluster Gear (w/ Bearing)	1
7	1705840	Shaft	1
8	1702951	Stud Bolt	1
9	1703052	Washer	1

Ref. No.	Part No.	Description	No. Req'd.
10	1185165	Needle Bearing	2
11	1104954	Grease Fitting	1
12	1185074	Needle Bearing	2
13	1185251	Pan Hd. Screw	8
14	1702907	Gear Case	1
15	1703051	Bolt	2
16	1705118	Seal	1
17	1705117	Seal	1

FRONT AXLE

03.05.2011

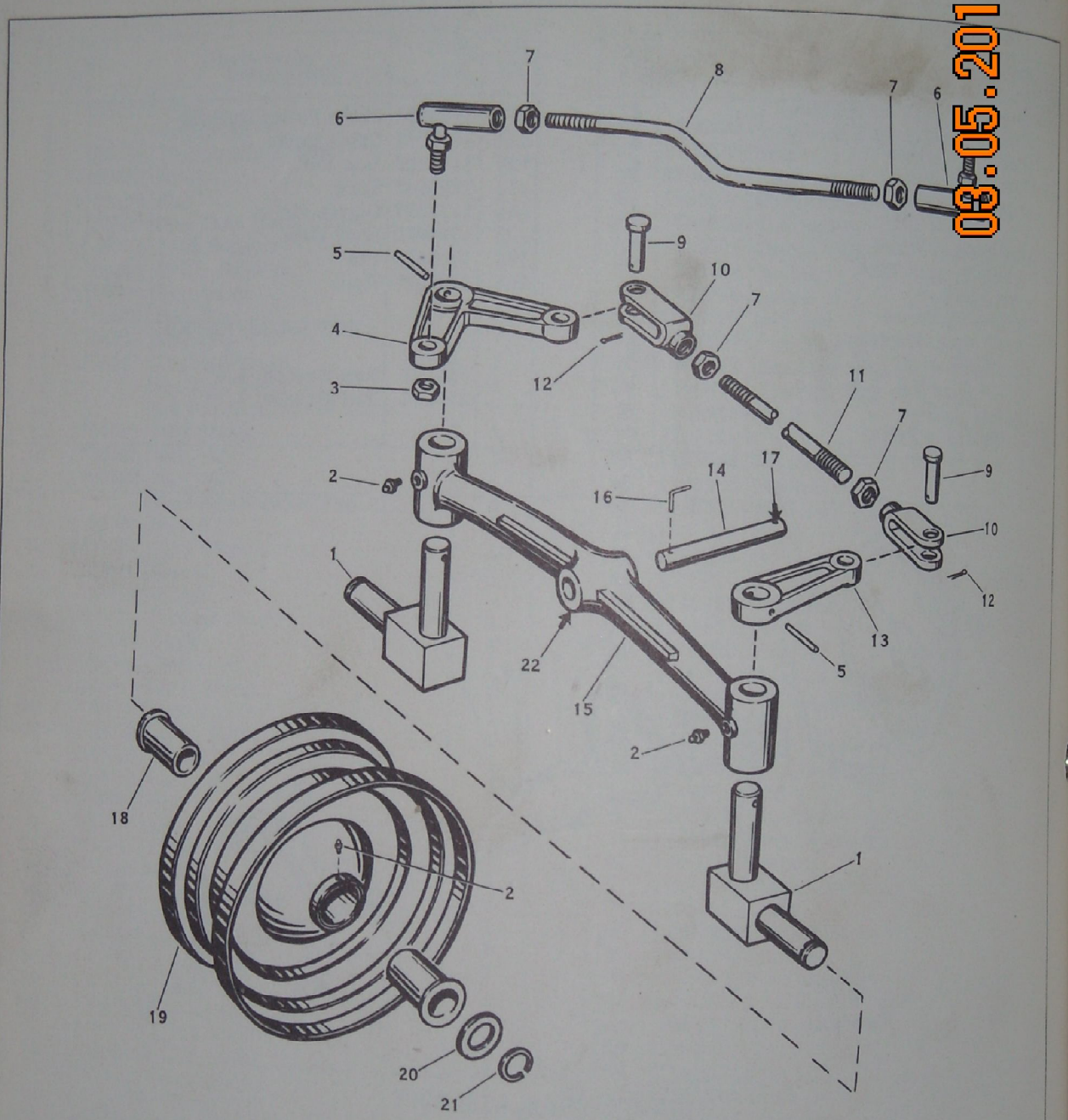

Figure 7

Ref. No.	Part No.	Description	No. Req'd.
1	1705880	Spindle	2
2	1104954	Grease Fitting	4
3	1110371	Self Locking Nut	1
4	1706628	Steering Arm R.H.	1
5	1705928	Drive Pin	2
6	1705259	Ball Joint	2
7		Jam Nut, 1/2-20	4
8	1706626	Drag Link	1
9	1110525	Clevis Pin	2
10	1702009	Tie Rod Yoke	2
11	1706372	Tie Rod	1

Ref. No.	Part No.	Description	No. Req'd.
12	1100350	Cotter Pin	2
13	1705883	Steering Arm L.H.	1
14	1706387	Axle Pivot Pin	1
15	1706371	Axle	1
16	1706388	Pin Lock	1
17	1185096	Cotter Pin	4
18	1706085	Bushing	2
19	1706084	Wheel (Inc. Bearings)	As Req.
20	1705820	Washer	2
21	1118554	Retaining Ring	1
22	1110086	Grease Fitting	2

03.05.2011

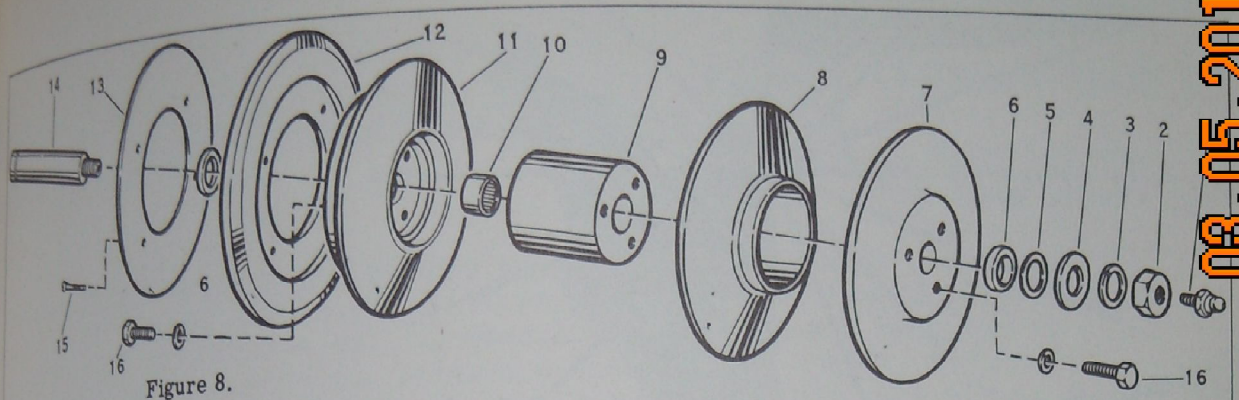

Figure 8.

VARIABLE SHEAVE ASSEMBLY

Ref. No.	Part No.	Description	No. Req'd.
1	1104954	Grease Fitting	1
2		Jam Nut, 1/2-13	1
3		Lockwasher, 1/2"	1
4		Washer, 1/2" SAE	1
5	1705093	Shim	As Req.
6	1706427	Spacer	2
7	1706363	Flange Outer	1
8	1706360	Control Flange	1

Ref. No.	Part No.	Description	No. Req'd.
9	1706428	Pulley Hub	1
10	1185074	Needle Bearing	2
11	1706365	Inner Flange	1
12	1706376	Reverse Disc	1
13	1706429	Clamp Ring	1
14	1706430	Pulley Shaft	1
15	1185299	Screw, No. 10-24 x 5/8"	4
16		Cap Screw, 1/4-28 x 3/4"	6

LUBRICATION

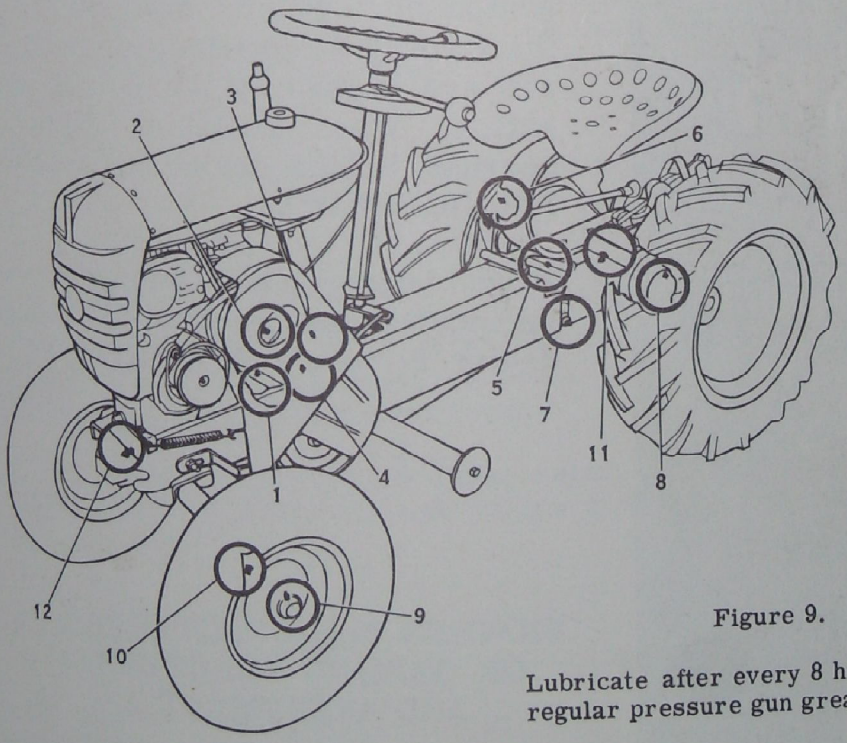

Figure 9.

Lubricate after every 8 hours of use with regular pressure gun grease

1. Drive Shaft Housing (under frame)
2. Versa-matic Sheave
3. Pulley Support (two)
4. Pivot Support
5. Transmission Shaft Housing (under frame)
6. Gear Case
7. Chain Tightener
8. Rear Wheel Hub (one on each hub)
9. Front Wheel Hub (one on each hub)
10. Front Spindle (one each spindle)
11. Rear Axle (under frame)
12. Front Axle

08.05.2011

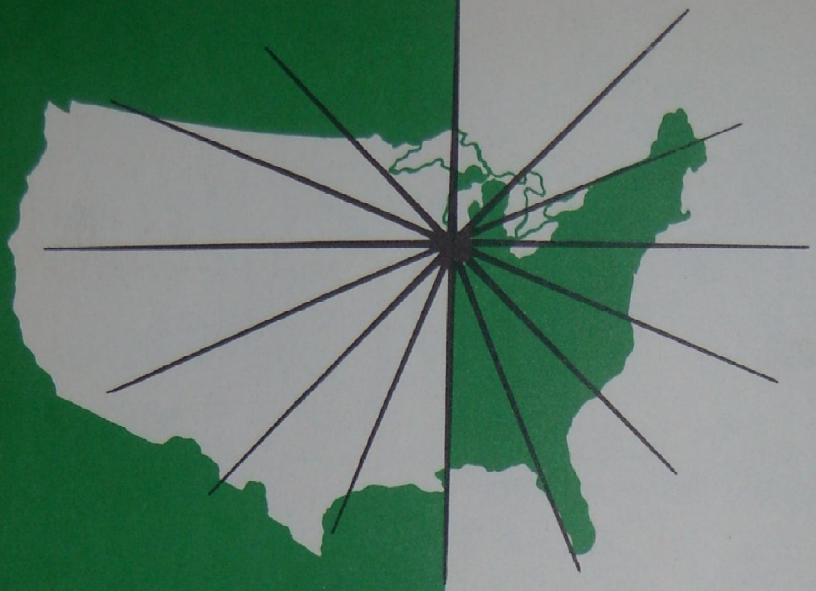

NATION WIDE SERVICE .... GENUINE FACTORY REPAIR PARTS

The Bolens Products Division of Food Machinery and Chemical Corporation has established a nation wide reputation for quality products. This reputation, gained through advanced engineering and efficient manufacturing methods is important to remember when buying replacement parts.

Genuine Bolens parts assure the continued high performance originally built into your equipment. Bolens dealers are appointed on their ability to provide prompt efficient service, and are backed by the Bolens service organization. When replacing parts consult your nearest Bolens dealer for GENUINE BOLENS SERVICE PARTS.

When buying new equipment, remember the protective service offered through the Bolens dealer in your community.

PIONEER MANUFACTURERS
OF GARDEN TRACTORS
AND EQUIPMENT

fmc
FOOD MACHINERY AND CHEMICAL CORPORATION

Bolens Products Division

FOOD MACHINERY AND CHEMICAL CORPORATION
PORT WASHINGTON, WISCONSIN

FORM NO. 550799

KEN COOK CO-LITHO